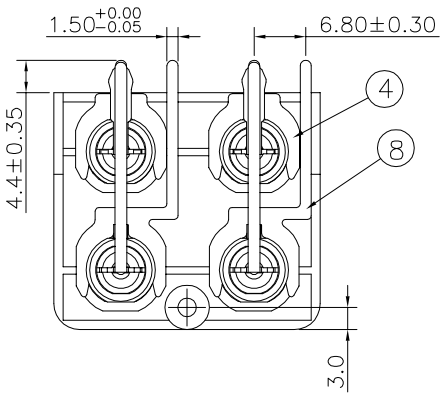

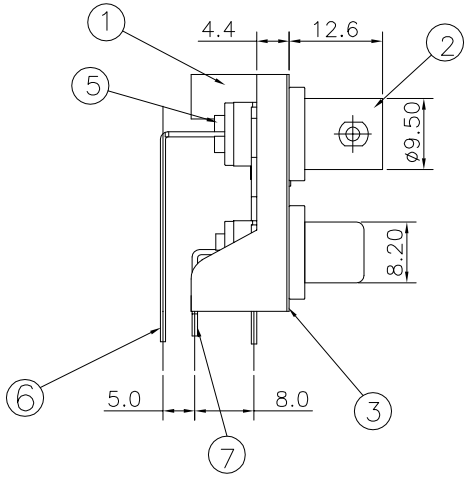

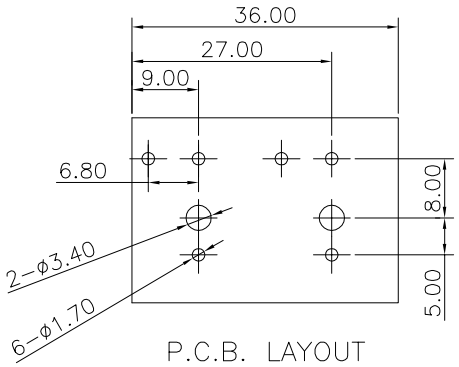

所有材料為
"環保材料"

2013.11.06

RoHS

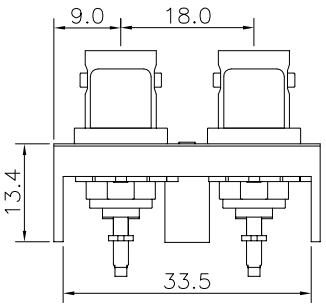

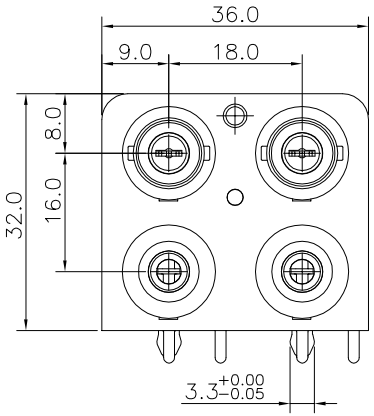

NO.	DESCRIPTION	QTY	MATERIAL	COLOR	REMARK
9	RCA BODY	2	ZINC ALLOY	———	NICKEL
8	STEEL WIRE−04	2	SPCC	———	NICKEL
7	STEEL WIRE−03	2	BRASS	———	NICKEL
6	STEEL WIRE−02	2	BRASS	———	NICKEL
5	INSULATOR	2	POM	WHITE	———
4	STEEL WIRE−01	2	SPCC	———	NICKEL
3	MOUNT	1	SUS	———	———
2	BNC BODY	2	ZINC ALLOY	———	NICKEL
1	BRACKET	1	ABS	BLACK	———

CHERNG WEEI

eCOMPONENTSLTD

DESCRIPTION(內容): BNC CONNECTOR

PART NO: (料號) CB-202-11R

DWG NO(圖號): SCB-202-11R

DRAWN(製圖): MIMI

CHECKED(確認): MANDY

APPROVAL(核准): JOHNNY

GENERAL TOLERANCE: (公差)

X	±0.50	Angle	
X.X	±0.30	X	°± 3°
X.XX	±0.20	X.X	°± 2°
X.XXX	±0.10	X.XX	°± 1°

SCALE(比例): FREE

REV: R0

UNIT: mm

SIZE: A4

SHEET: 1/1

REV	DESCRIPTION	DATE
R0	RELEASE	2013.11.06
R1		
R2		
R3		

CF1165